REY2582-111120

TRASH CAN

www.reytek.com

304 STAINLESS STEEL CONSTRUCTION

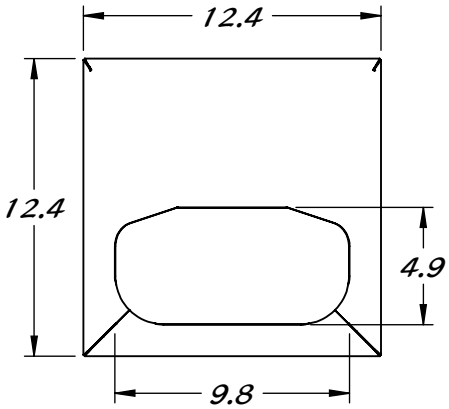

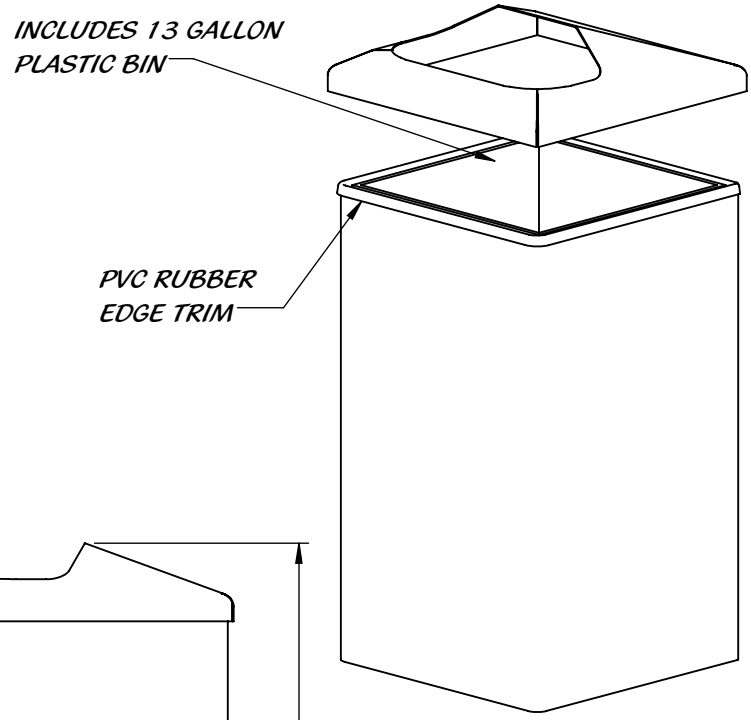

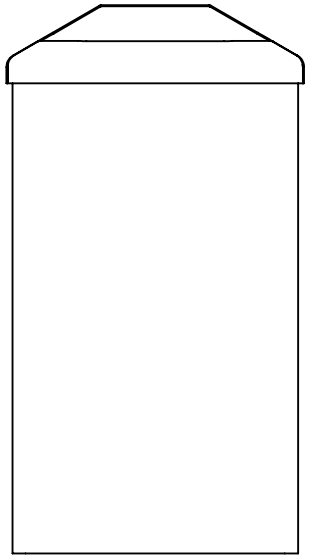

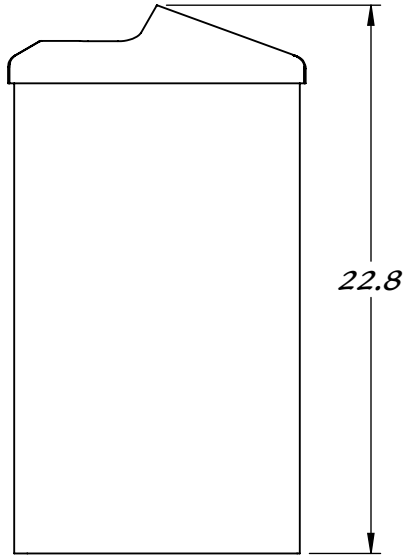

Property of Reytek Equipment LLC
Use of this information without the prior consent of Reytek Equipment LLC is strictly forbidden.