REY1432 MATERIAL CART

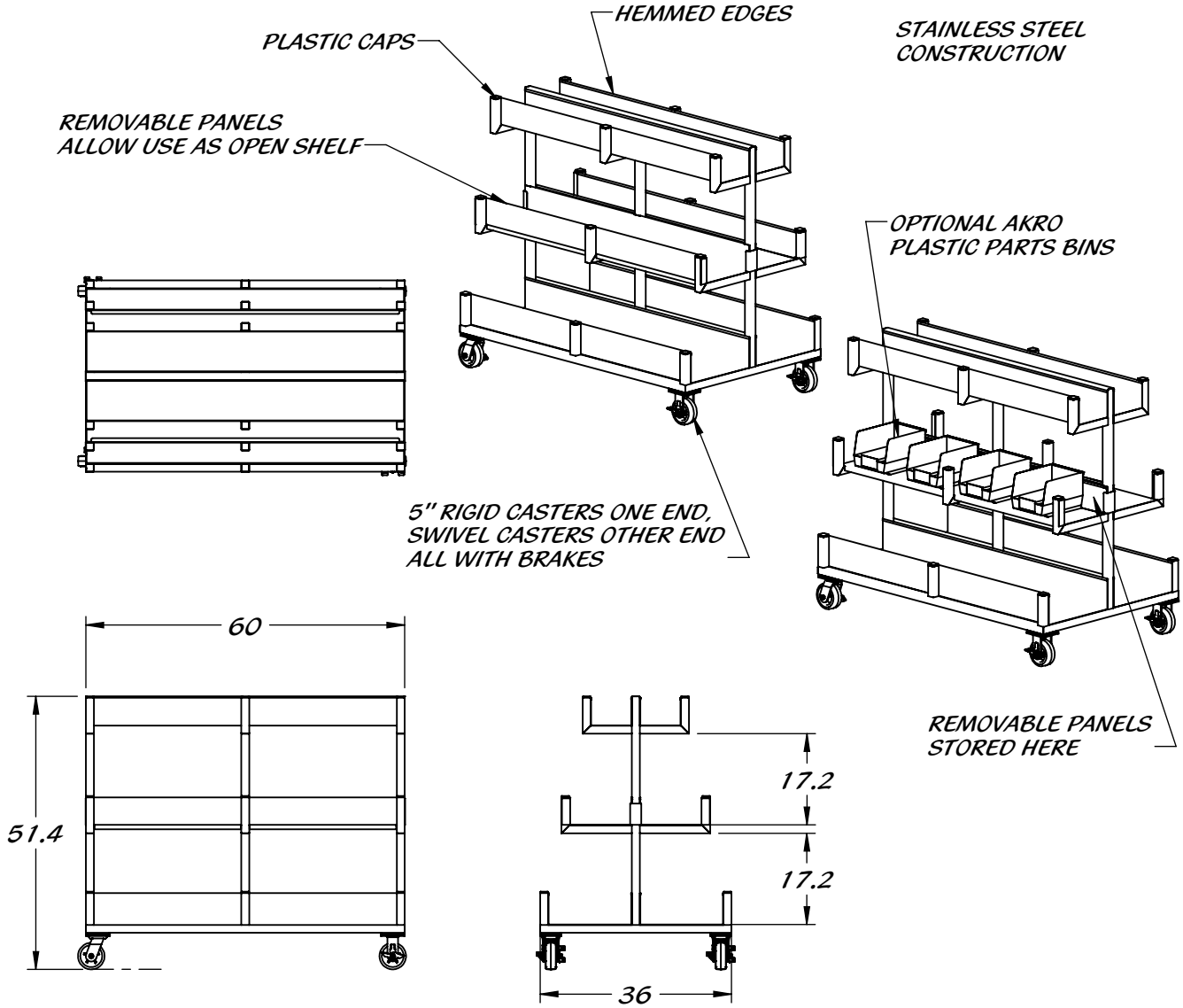

Property of Reytek Corporation.
Use of this information without the prior consent of Reytek Corporation is strictly forbidden.